

Central headquarters:
ul. Biała Droga 31, 34-122 Wieprz

Service:
ul. Skotnica 120, 32-652 Bulowice
phone: **+48 33 875 93 80**
e-mail: **serwis@techsterowniki.pl**

EN

USER'S MANUAL
EU-R-8s Plus

TECH CONTROLLERS

TECH CONTROLLERS

WARRANTY CARD

TECH company ensures to the Buyer proper operation of the device for the period of 24 months from the date of sale. The Guarantor undertakes to repair the device free of charge if the defects occurred through the manufacturer's fault. The device should be delivered to its manufacturer. Principles of conduct in the case of a complaint are determined by the Act on specifi c terms and conditions of consumer sale and amendments of the Civil Code (Journal of Laws of 5 September 2002).

CAUTION! THE TEMPERATURE SENSOR CANNOT BE IMMERSED IN ANY LIQUID (OIL ETC). THIS MAY RESULT IN DAMAGING THE CONTROLLER AND LOSS OF WARRANTY! THE ACCEPTABLE RELATIVE HUMIDITY OF THE CONTROLLER'S ENVIRONMENT IS 5÷85% REL.H. WITHOUT THE STEAM CONDENSATION EFFECT.
THE DEVICE IS NOT INTENDED TO BE OPERATED BY CHILDREN.

Activities related to setting and regulation of the controller parameters described in the Instruction Manual and parts wearing out during normal operation, such as fuses, are not covered by warranty repairs. The warranty does not cover damages arising as a result of improper operation or through the user's fault, mechanical damage or damage created as a result of fi re, fl ood, atmospheric discharges, overvoltage or short-circuit. The interference of an unauthorized service, wilful repairs, modifi cations and construction changes cause the loss of Warranty. TECH controllers have protective seals. Removing a seal results in the loss of Warranty.

The costs of unjustifi able service call to a defect will be borne exclusively by the buyer. The unjustifi able service call is defi ned as a call to remove damages not resulting from the Guarantor's fault as well as a call considered unjustifi able by the service after diagnosing the device (e.g. damage of the equipment through the fault of the client or not subject to Warranty), or if the device defect occurred for reasons lying beyond the device.

In order to execute the rights arising from this Warranty, the user is obliged, at his own cost and risk, deliver the device to the Guarantor along with a correctly fi lled-in warranty card (containing in particular the sale date, the seller's signature and
a description of the defect) and sales proof (receipt, VAT invoice, etc.). The Warranty Card is the only basis for repair free of
charge. The complaint repair time is 14 days.

When the Warranty Card is lost or damaged, the manufacturer does not issue a duplicate.

.....
seller's stamp

.....
date of sale

SAFETY

Before using the device for the first time the user should read the following regulations carefully. Not obeying the rules included in this manual may lead to personal injuries or controller damage. The user's manual should be stored in a safe place for further reference. In order to avoid accidents and errors it should be ensured that every person using the device has familiarized themselves with the principle of operation as well as security functions of the controller. If the device is to be sold or put in a diff erent place, make sure that the user's manual is there with the device so that any potential user has access to essential information about the device.
The manufacturer does not accept responsibility for any injuries or damage resulting from negligence; therefore, users are obliged to take the necessary safety measures listed in this manual to protect their lives and property.

WARNING

- The device should be installed by a qualified electrician.
- The regulator is not intended to be used by children.
- Any use other than specified by the manufacturer is forbidden.

We are committed to protecting the environment. Manufacturing electronic devices imposes an obligation of providing for environmentally safe disposal of used electronic components and devices. Hence, we have been entered into a register kept by the Inspection For Environmental Protection. The crossed-out bin symbol on a product means that the product may not be disposed of to household waste containers. Recycling of wastes helps to protect the environment. The user is obliged to transfer their used equipment to a collection point where all electric and electronic components.



EU DECLARATION OF CONFORMITY

Hereby, we declare under our sole responsibility that **EU-R-8s Plus** manufactured by TECH, head-quartered in Wieprz Biała Droga 31, 34-122 Wieprz, is compliant with Directive 2014/53/EU of the European parliament and of the Council of 16 April 2014 on the harmonisation of the laws of the Member States relating to the making available on the market of radio equipment, Directive 2009/125/EC establishing a framework for the setting of ecodesign requirements for energy-related products as well as the regulation by the MINISTRY OF ENTREPRENEURSHIP AND TECHNOLOGY of 24 June 2019 amending the regulation concerning the essential requirements as regards the restriction of the use of certain hazardous substances in electrical and electronic equipment, implementing provisions of Directive (EU) 2017/2102 of the European Parliament and of the Council of 15 November 2017 amending Directive 2011/65/EU on the restriction of the use of certain hazardous substances in electrical and electronic equipment (OJ L 305, 21.11.2017, p. 8).
For compliance assessment, harmonized standards were used:
PN-EN IEC 60730-2-9 :2019-06 art. 3.1a Safety of use
PN-EN 62479:2011 art. 3.1 a Safety of use
ETSI EN 301 489-1 V2.2.3 (2019-11) art.3.1b Electromagnetic compatibility
ETSI EN 301 489-3 V2.1.1:2019-03 art.3.1 b Electromagnetic compatibility
ETSI EN 300 220-2 V3.2.1 (2018-06) art.3.2 Effective and coherent use of radio spectrum
ETSI EN 300 220-1 V3.1.1 (2017-02) art.3.2 Effective and coherent use of radio spectrum
EN IEC 63000:2018 RoHS

Paweł Jura Janusz Master
Prezesi firmy

Wieprz, 22.11.2022

TECHNICAL DATA

Power supply	batteries 2xAAA, 1,5V
Temperature adjustment range	5ºC ÷ 35ºC
Measurement error	± 0,5ºC
Humidity measurement range	10-95%RH
Operation frequency	868MHz

NOTE
The regulator is powered with batteries - it is recommended to check the batteries from time to time and replace them at least once every heating season.

The pictures and diagrams are for illustration purposes only.
The manufacturer reserves the right to introduce some hanges.

DESCRIPTION

The EU-R-8s Plus room regulator is intended for controlling the heating device. It cooperates with the zone controllers and communicates with them wirelessly.
Its main task is to maintain the pre-set room temperature by sending a signal to the heating device informing that the pre-set temperature has been reached.

Colour versions available: white or black

Controller features:

- large easy-to-read display
- front panel made of glass
- built-in temperature sensor, humidity sensor and floor sensor (optional)
- time heating program

Current temperature is displayed on the screen. In order to switch from temperature screen to humidity screen, press EXIT.

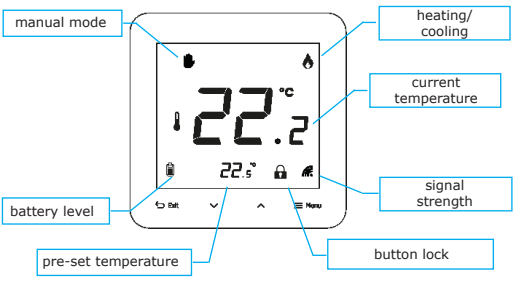

- **Manual mode** - the pre-set temperature may be adjusted manually in the main screen view using the buttons ∧∨.

Holding the EXIT button while in being in manual mode exits this mode.

- **Button lock -** after pressing the Menu button, the **Loc** function appears. Use one of the buttons ∧∨ to select yes or no (enabling / disabling the button lock). In order to confirm, wait for about 5 seconds or press Menu. To unlock the buttons, hold both the buttons ∧∨ until the padlock icon disappears.

HOW TO INSTALL THE REGULATOR

The regulator should be installed by a qualified person.

The diagram below illustrates how to install particular elements:

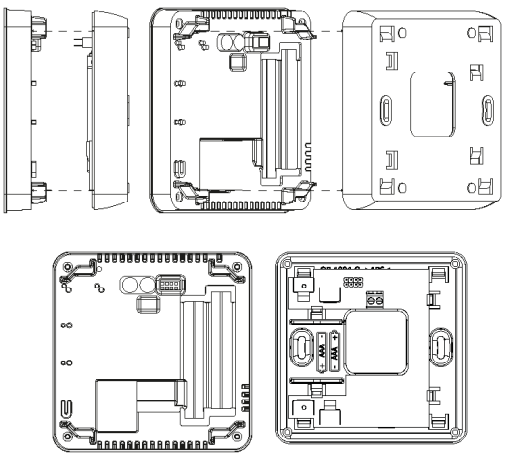

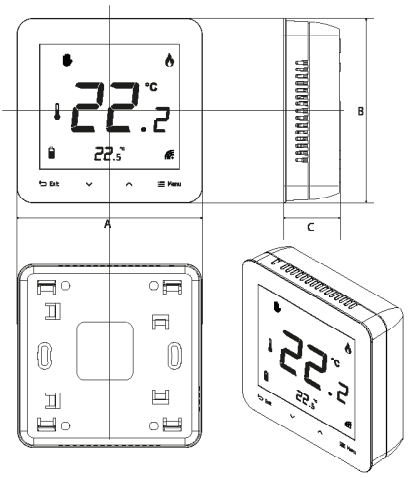

A/B - 84mm
C - 25mm

The diagram below illustrates how to install the floor sensor:

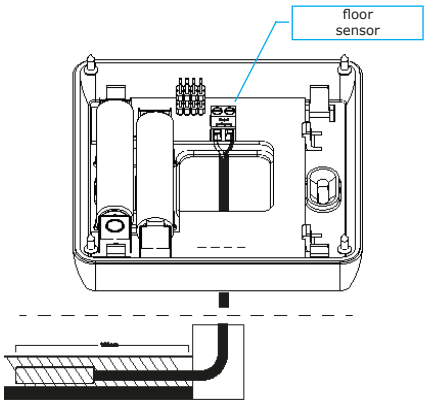

HOW TO REGISTER THE REGULATOR

In order to register the regulator in the main controller, go to Zones > Registration as described in the manual of the given controller.
Next, briefly press the registration button in the EU-R-8s Plus regulator. After **reg** is displayed, briefly press the registration button again. If the registration process has been successful, **SCs** appears on the screen. If any errors occurred, the regulator displays **Err**.
In order to register the regulator as a floor sensor, press the registration button twice.

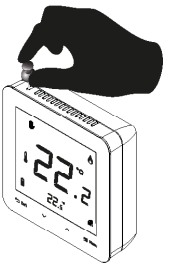

NOTE

- Only 1 regulator may be assigned to one zone.
- The regulator cannot be unregistered but only disabled.
- If the user attempts to register a sensor in a different zone, the sensor is unregistered from the first zone and registered in the other one.

Holding the registration button on the controller for a few seconds will enable synchronization and consequently any change in the pre-set temperature in the main controller will automatically result in the same change in the regulator. Without synchronization, a change in the pre-set temperature in the main controller will cause a change in the regulator after a momentary delay.

*

Holding the registration button while turning the regulator on will calibrate the buttons.

HOW TO CHANGE PRE-SET TEMPERATURE

The pre-set temperature in the zone can be changed directly from the EU-R-8s Plus regulator using the buttons ∧∨. To make it possible, the controller must be registered to the main controller. If the regulator displays **Una** after one of the buttons ∧∨ is pressed, it means that the controller is not registered.

It is possible to change the pre-set temperature in the screen view with the pre-set and current temperature, using the buttons ∧∨.

- After setting the desired temperature, the screen displays the time when the temperature value will apply. This time can be edited using the buttons ∧∨.
- The **OFF** function disables the manually set parameters and it means that the settings resulting from the weekly schedule set in the main controller will apply.
- If **Con** has been selected, manual settings will apply permanently regardless of the schedule settings.

If the pre-set temperature is higher than the current temperature, heating is activated and the flame icon appears. This icon is not displayed when the OFF function has been selected.

MENU FUNCTIONS

In order to enter the regulator menu, **HOLD** the Menu button. Next, press this button to switch between functions.

1. Temperature sensor calibration

CAL This function enables the user to check the value of temperature sensor calibration. The calibration setting range is -10°C to +10°C and it may be adjusted in the main controller.

2. Factory settings

FAB The Fab function enables the user to restore factory settings. When this option has been selected, the screen starts flashing. Use the buttons ∧∨ to change the last digit to 1. In order to confirm, wait for about 5 seconds or press the Menu button.

3. Software version

uEr This function enables the user to check the current software version. The version number is necessary while contacting the service staff.